See all 9 Products in Family

0.3 OD M22.5 x 0.50, Mounted Absorptive ND Filter

Stock **#59-162** CLEARANCE **1 In Stock**

- 1 + **A$52.00**

ADD TO CART

Volume Pricing	
Qty 1+	**A$52.00** each
Need More?	Request Quote

Product Downloads

SPECIFICATIONS

General

Type:
Mounted Imaging Filter

Note:
AR Coating: MgF_2

Physical & Mechanical Properties

Clear Aperture CA (mm):
18.5

Thickness with Mount (mm):
4.50

Optical Properties

Optical Density OD (Average):
0.3

Substrate:
ND Filter Glass

Surface Quality:
80-50

Transmission (%):
50

Blocking Wavelength Range (nm):
400 - 700

Coating Specification:
R_{avg} ≤1.75% @ 400 - 700nm

Threading & Mounting

Filter Thread:
M22.5 x 0.50

Mount Thickness (mm):
5.2 ±0.3

Mount Diameter (mm):
24.0 ±0.3

Mount Thickness Including Threads (mm):
7

Regulatory Compliance

RoHS 2015:
Compliant

REACH 201:
Compliant

Certificate of Conformance:
View

PRODUCT DETAILS

- Spectrally Flat from 400-700nm
- Homogeneous Glass: Blocks by Absorption
- Light/Exposure Control for Imaging

Mounted Absorptive Neutral Density (ND) Filters appear gray in color and reduce the amount of light reaching the camera's sensor. Since the transmission value only varies over a small percentage in the visible, there is no effect on color balance. Instead of just stopping down the lens aperture due to high light levels, ND filters allow for wider apertures which can be used to decrease the depth of field. This allows the important information to be separated from the background. Mounted Absorptive Neutral Density (ND) Filters, compared to polarizing filters, are ideal for overall light reduction in cases of extreme light intensity. By stacking filters, it is possible to achieve other Optical Density (OD) values. All mounted filters can be threaded together with identical male and female threads on each mount. Optical Density exhibits an additive relationship; for example, stacking filters with OD values of 0.6 and 0.9 yields a resultant density of 1.5. The Optical Density (OD) is related to the transmission by the following equation: T = 10-D x 100 = percent transmission.

TECHNICAL INFORMATION

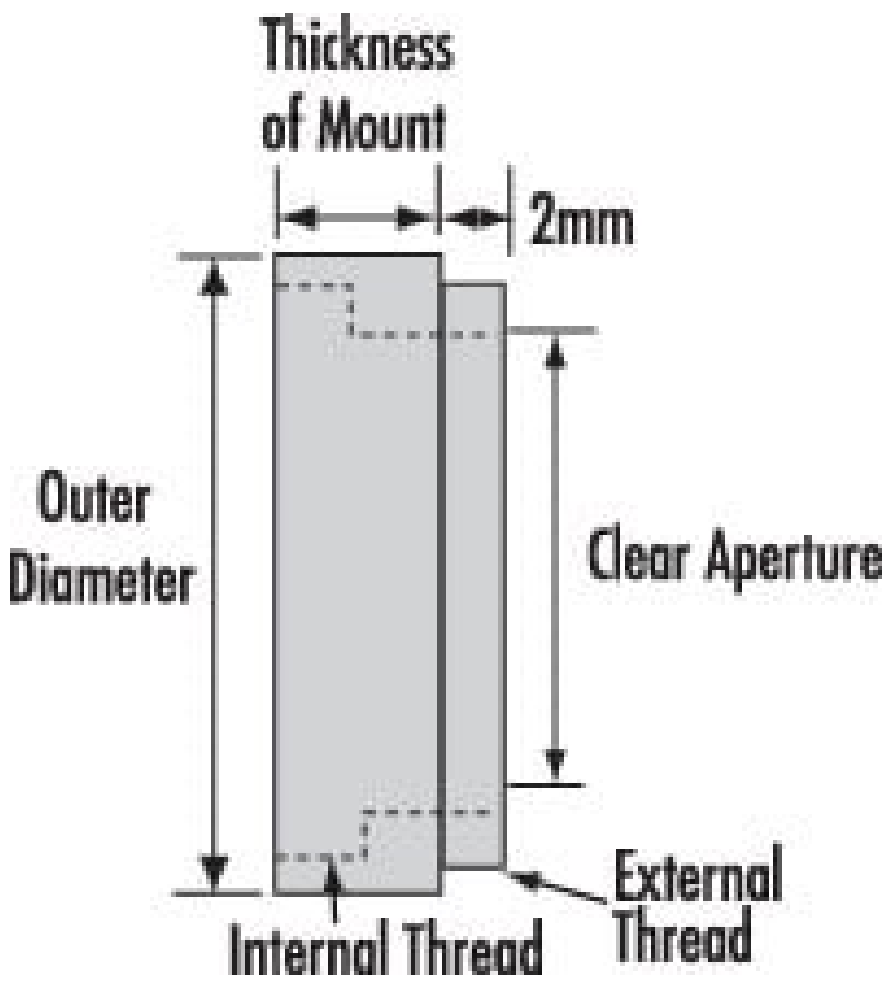

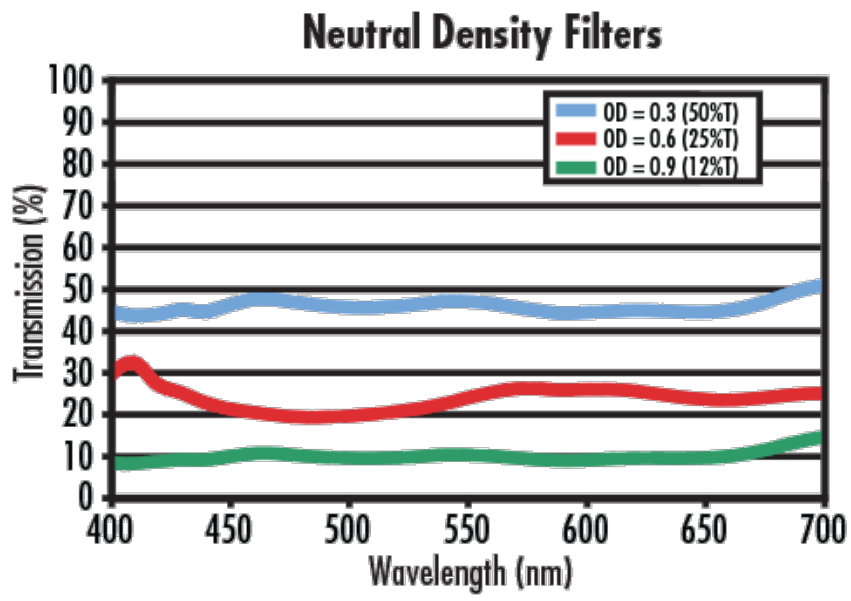
Neutral Density Filters
OD = 0.3 (50%T)
OD = 0.6 (25%T)
OD = 0.9 (12%T)
Transmission (%)
100
90
80
70
60
50
40
30
20
10
0
400
450
500
550
600
650
700
Wavelength (nm)