TECHSPEC® 75mm C VIS-NIR Series Fixed Focal Length Lens

Stock **#74-054** NEW CONTACT US

- 1 + A$523.00

ADD TO CART

Volume Pricing	
Qty 1+	**A$523.00** each
Need More?	Request Quote

Product Downloads

SPECIFICATIONS

General

Type:
Fixed Focal Length Lens

Imaging Lens Type:
Compact Lens Coated for Visible to Near Infared

Physical & Mechanical Properties

Iris Option:
Variable

Length (mm):
98.76

Maximum Diameter (mm):
48.0

Outer Diameter (mm):
48.0

Maximum Rear Protrusion (mm):
7.24

Optical Properties

Horizontal Field of View @ Max Sensor Format:
5.76°

Field of View at Max Sensor Format:
Horizontal: 5.76°
Vertical: 4.32°
Diagonal: 7.19°

Horizontal Field of View, 2/3" Sensor:
5.76°

Horizontal Field of View, 1/1.8" Sensor:
4.71°

Horizontal Field of View, 1/2" Sensor:
4.19°

Horizontal Field of View, 1/2.5" Sensor:
3.77°

Horizontal Field of View, 1/3" Sensor:
3.14°

Maximum Image Circle (mm):
11.00

Numerical Aperture NA, Object Side:
0.05111

Number of Elements (Groups):
7 (6)

Focal Length FL (mm):
75.00

Working Distance (mm):
500 - ∞

Aperture (f/#):
f/2.0 - f/16.0

Coating:
425 - 1000nm BBAR

Coating Specification:
425 - 1000nm BBAR

Entrance Pupil Position (mm):
63.265

Object Space Principal Plane (mm):
-15.01

Image Space Principal Plane (mm):
-64.79

Maximum Distortion (%):
0.068

Exit Pupil Position (mm):
-31.983

Lens Wavelength Range:
VIS-NIR

Wavelength:
VIS-NIR

Sensor

Maximum Sensor Format:
2/3"

Threading & Mounting

Filter Thread:
M43 x 0.75 (Female)

Mount:
C-Mount

Environmental & Durability Factors

Storage Temperature (°C):
-20 to +60 For questions regarding operating temperature please contact our support team

Regulatory Compliance

Certificate of Conformance:
View

PRODUCT DETAILS

- Up to 2/3", C-Mount Lens
- Up to 7.5 MegaPixels, 2.8µm Pixel Size Sensors
- Compact (C) Broadband Lens for 425-1000nm Wavelength Range
- 3.5mm to 50mm Focal Length

TECHSPEC® C Series Fixed Focal Length VIS-NIR Lenses are designed for use in machine vision applications that require NIR or VIS-NIR performance, with the working distance and resolution requirements of factory automation and inspection in mind. Featuring large maximum apertures and a Broadband Anti-Reflection (BBAR) coating designed out to 1000nm, these high performance lenses can be used in even the most restrictive lighting conditions. TECHSPEC® C Series Fixed Focal Length VIS-NIR Lenses are manufactured to a high tolerance, resulting in greater levels of imaging performance and low lens-to-lens variation, assuring simple installing into multiple systems. By combining high optical performance, industrial features, and small package size, the C Series Fixed Focal Length VIS-NIR Lenses represent a new standard in factory automation optics.

Also available with a **VIS Broadband Anti-Reflection (BBAR)** or **SWIR** Coatings

Note: For IR imaging alone, **UV-VIS Cut Filters** are available and thread directly onto the front filter threads of the 4.5mm, 16mm, 25mm, 35mm and 50mm FL lenses.

TECHNICAL INFORMATION
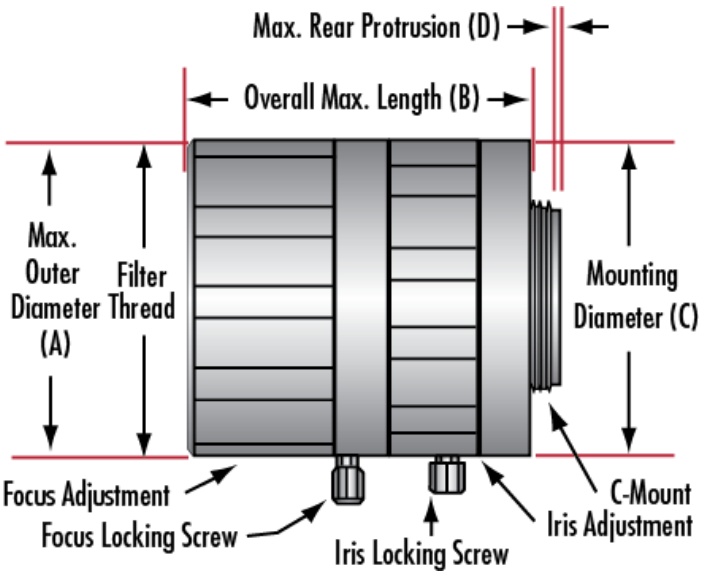
Focal Length	A	B	C	D
16mm	33.0mm	40.5mm	33.0mm	1.0mm
25mm	31.0mm	30.5mm	31.0mm	1.3mm
35mm	33.0mm	41.0mm	33.0mm	0mm
50mm	35.8mm	53.7mm	35.8mm	2.85mm