See all 102 Products in Family

TECHSPEC® 9.0mm Diameter x 90.0mm FL, 633nm V-Coat, PCX Lens

633nm Laser Line Coated Plano-Convex (PCX) Lenses

Stock **#69-427** CONTACT US

Other Coating Options

- 1 + A$80.80

ADD TO CART

Volume Pricing	
Qty 1-9	**A$80.80** each
Qty 10-25	**A$72.80** each
Qty 26-49	**A$64.80** each
Need More?	Request Quote

Product Downloads

General

Type:

Plano-Convex Lens

Physical & Mechanical Properties

Diameter (mm):

9.00 +0.0/-0.025

Centering (arcmin):
<1

Center Thickness CT (mm):
2.00 ±0.05

Edge Thickness ET (mm):
1.78

Clear Aperture CA (mm):
8.1

Bevel:
Protective as needed

Optical Properties

Effective Focal Length EFL (mm):
90.00 @ 587.6nm

Back Focal Length BFL (mm):
88.68

Coating:
Laser V-Coat (633nm)

Coating Specification:
R_{abs} <0.25% @ 633nm

Substrate:
N-BK7

Surface Quality:
40-20

Power (P-V) @ 632.8nm:
1.5λ

Irregularity (P-V) @ 632.8nm:
λ/4

Focal Length Tolerance (%):
±1

Radius R_1 (mm):
46.51

f/#:
10.00

Numerical Aperture NA:
0.05

Design Wavelength DWL (nm):
633

Damage Threshold, By Design:
5 J/cm^2 @ 633nm, 10ns

Regulatory Compliance

RoHS 2015:
Compliant

Certificate of Conformance:
View

Reach 235:
Compliant

Product Details

- <0.25% Reflection at 633nm for HeNe Applications
- BBAR Coating Options Also Available: uncoated, MgF_2, VIS 0°, VIS-NIR, NIR I, NIR II
- 405nm, 532nm, 633nm, 785nm, 980nm, 1064nm, and 1550nm V-Coated Options Offered

TECHSPEC® 633nm Laser Line Coated Plano-Convex (PCX) Lenses are designed for maximum throughput at the specified laser wavelength. These lenses are ideal for collecting and focusing light from laser sources and their corresponding harmonics. With a maximum reflection of <0.25% per surface at the design wavelength, the lenses will provide superior transmission in applications utilizing multiple optical components. TECHSPEC ® 633nm Laser Line Coated Plano-Convex (PCX) Lenses are available Laser V-Coated in a range of other wavelengths: 405nm, 532nm, 785nm, 980nm, 1064nm, and 1550nm. Other coating options are available, including uncoated, MgF2, VIS 0°, VIS-NIR, NIR I, and NIR II.

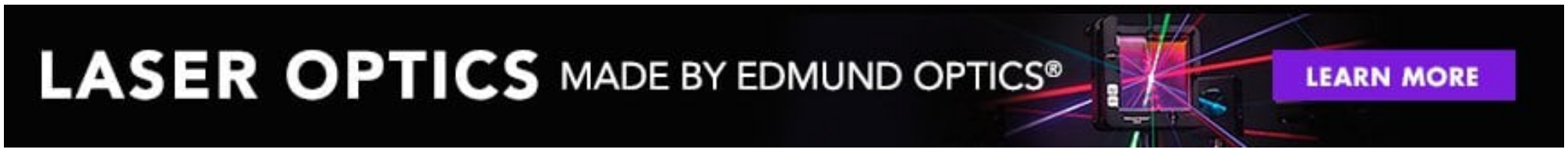

Technical Information

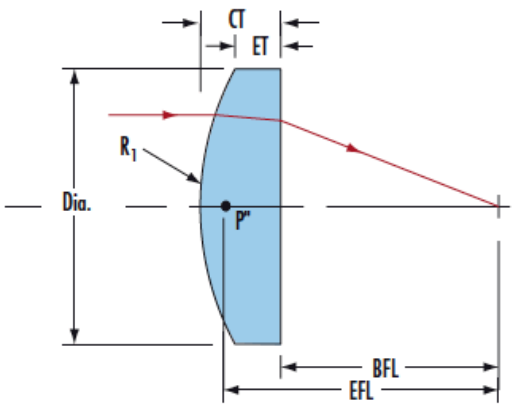

Custom

Edmund Optics offers comprehensive custom manufacturing services for optical and imaging components tailored to your specific application requirements. Whether in the prototyping phase or preparing for full-scale production, we provide flexible solutions to meet your needs. Our experienced engineers are here to assist—from concept to completion.

Our capabilities include:

- Custom dimensions, materials, coatings, and more
- High-precision surface quality and flatness
- Tight tolerances and complex geometries
- Scalable production—from prototype to volume

Learn more about our **custom manufacturing capabilities** or submit an inquiry **here.**

Compatible Mounts

;