See all 1 Products in Family

Tilt Stage Metric in Two Axes

Stock **#55-459** **15 In Stock**

- 1 + **A$611.20**

ADD TO CART

Volume Pricing	
Qty 1-9	**A$611.20** each
Qty 10+	**A$539.52** each
Need More?	Request Quote

Product Downloads

General

Type:
Metric

Physical & Mechanical Properties

Type of Movement:
Tip-Tilt

Stage Size (mm):
60 x 60

Travel (°):
±2.5

Center Hole:
M16 x 1

Construction:
Aluminium Stage

Leadscrew Pitch (mm):
0.25

Load Capacity (kg):
3

Weight (kg):
0.22

Hardware & Interface Connectivity

Type of Drive:
Fine Screw (100 Pitch)

Threading & Mounting

Mounting Threads:
(1) M16 x 1, (2) M6 x 1, (4) M4 x 0.7

Regulatory Compliance

RoHS 2015:
Exempt

Certificate of Conformance:
View

Reach 247:
Contains SVHC(s)

Product Details

- Tilt Control in Two Axes (±2.5°)
- Multiple Tapped and C'bored Holes for Easy Mounting
- Black Anodized Aluminum

Ideal for tilt control of both optics and mounting posts. Platform top plate has 4 M4 tapped holes at each corner (on 50mm centers) and one M16 tapped hole on center. Platform bottom plate has 2 counterbore holes for M4 SHCS, one M6 SHCS (on center) counterbore hole for mounting to our **Metric Breadboards and Base Plates**, and one M6 tapped hole for mounting to our **Metric Stainless Steel Mounting Posts**. Platform also features one M6 tapped hole for mounting vertically. Stage includes two M4 stainless steel socket head cap screws.

Compatible with the following stages: **#54-687**, **#55-032**, **#55-459**, **#55-527**, **#55-840**, **#55-841**, **#56-335**, and **#56-336**.

Technical Information

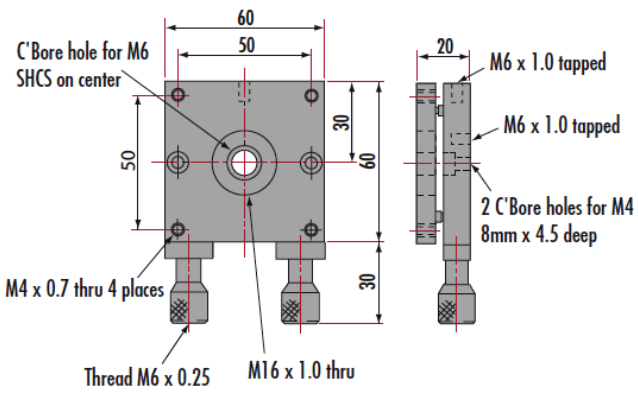

Units: mm