See all 22 Products in Family

Z Axis Bracket for 0.5" Stages(B)

#57-533: Z Axis Bracket for 0.5" Stages(B)

Stock **#57-533** **1 In Stock**

- 1 + **A$177.60**

ADD TO CART

Volume Pricing	
Qty 1+	**A$177.60** each
Need More?	Request Quote

Product Downloads

General

Type:
Adapter Brackets & Plates

Regulatory Compliance

RoHS 2015:
Compliant

Certificate of Conformance:
View

REACH 241:
Compliant

Product Details

- Two Micro Sizes Available
- Versions with Covered Rails
- Three Travel Selections
- X, XY, and XYZ Axis Models

These stages are a dimensional breakthrough and the smallest positioners available today. Positive spring loaded carriage provides precise, smooth motion with no backlash. Straight line accuracy under 2 microns. Features fine 80 TPI lead screw drive. The larger series, Stage Size B, are for longer travel, higher load applications. Fully metric compatible clearance holes. Covered Rail versions are slightly wider, but offer protection for the guide rails. Accessories allow for mounting our precision pinholes for spatial filtering applications. Anodized aluminum construction with stainless rails.

Technical Information

Manual Micro Positioning Stage #38-526

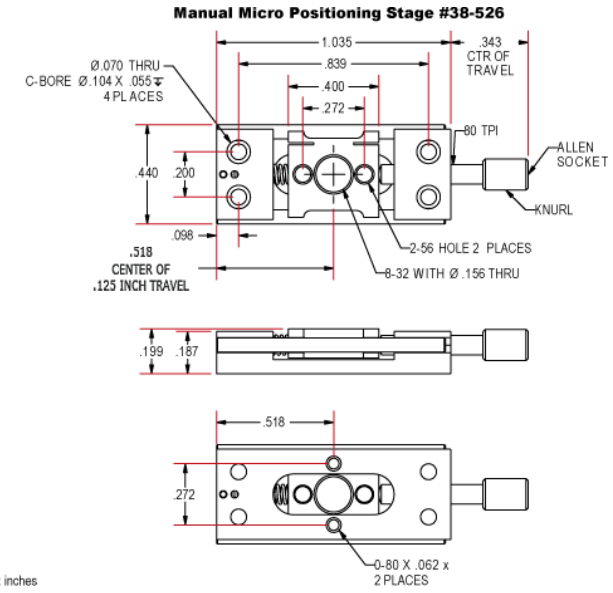

Units: inches

Manual Micro Positioning Stage #38-527

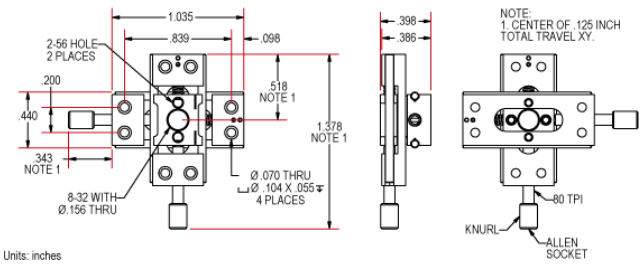

Units: inches

Manual Micro Positioning Stage #38-528

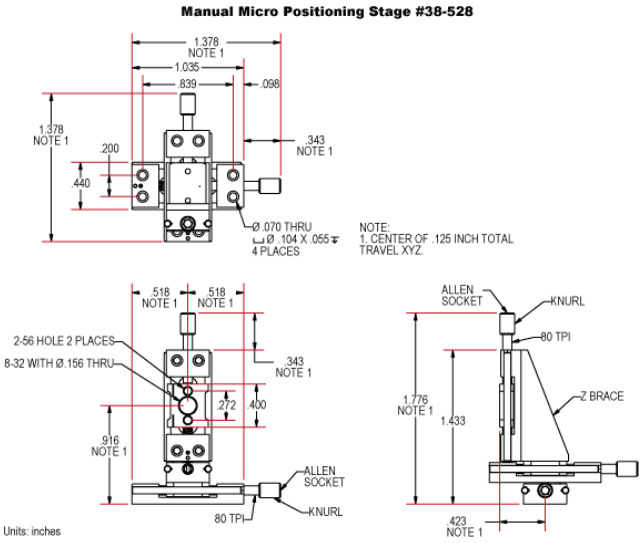

Units: inches

Manual Micro Positioning Stage #38-531

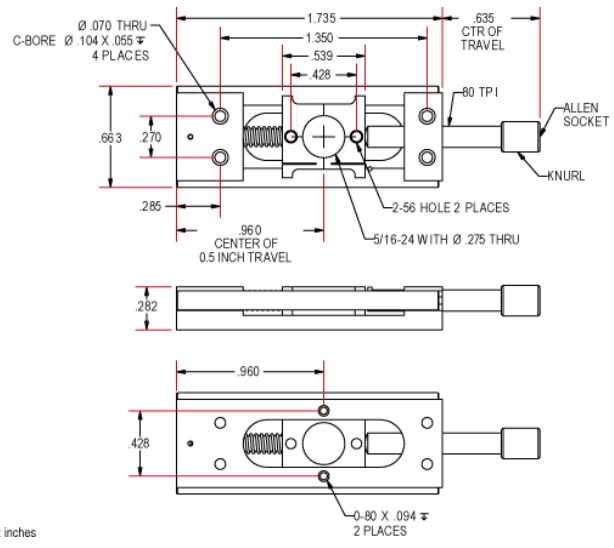

Units: inches

Manual Micro Positioning Stage #38-532

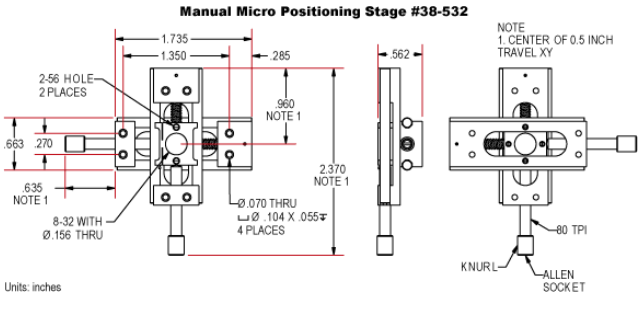

Units: inches

Manual Micro Positioning Stage #38-533

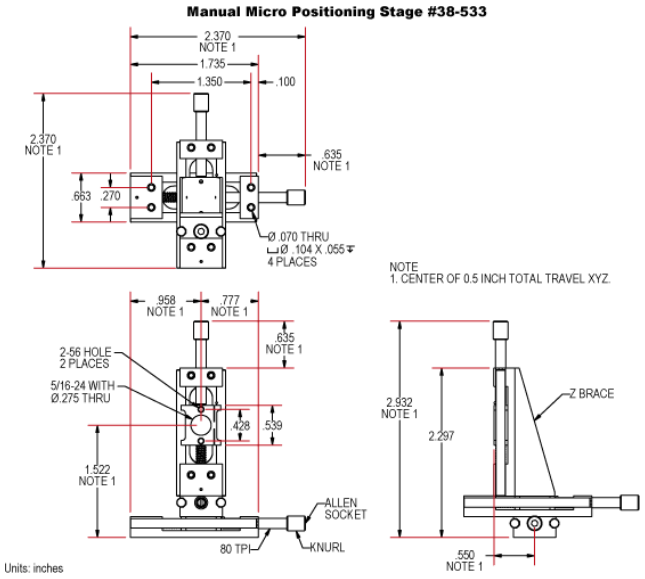

Manual Micro Positioning Stage #56-416

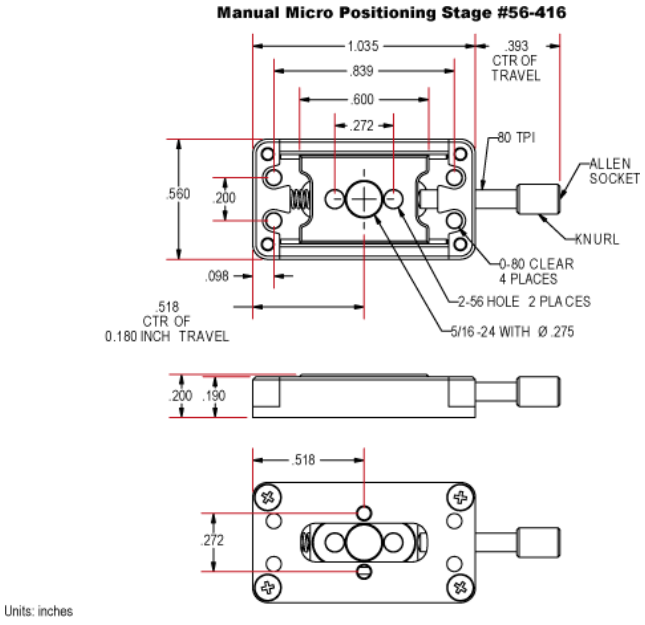

Manual Micro Positioning Stage #56-417

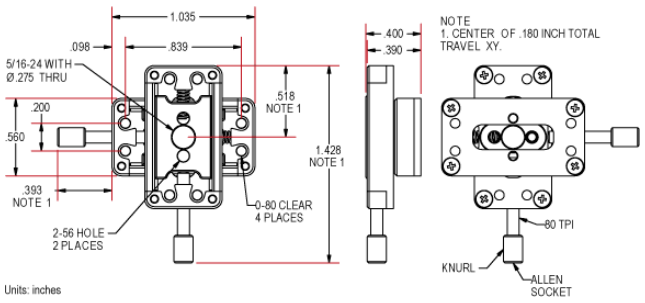

Manual Micro Positioning Stage #56-418

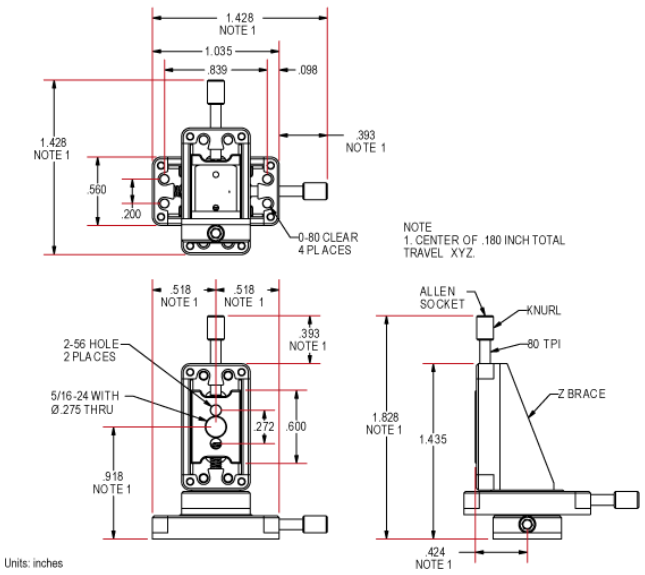

Manual Micro Positioning Stage #56-419

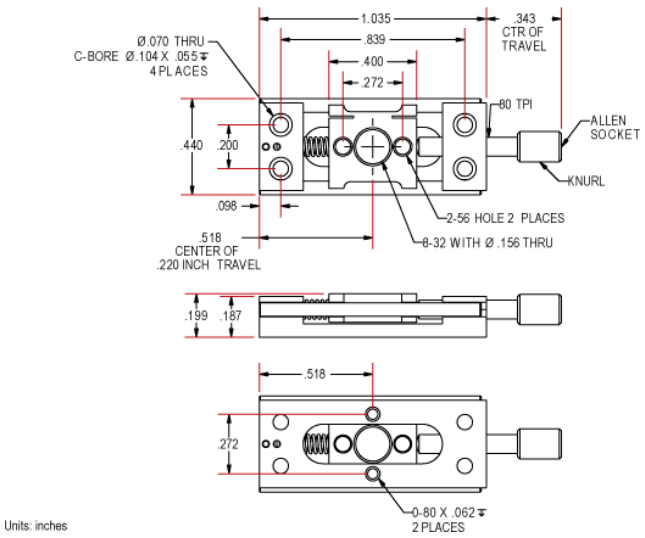

Manual Micro Positioning Stage #56-420

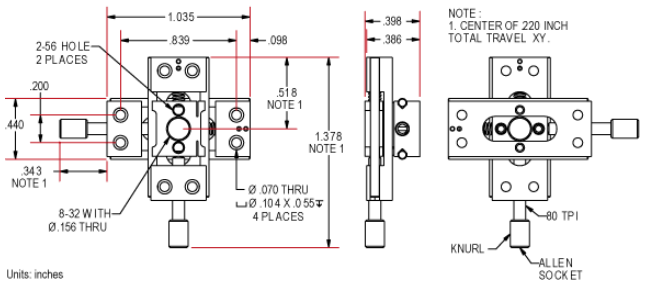

Units: inches

Manual Micro Positioning Stage #56-421

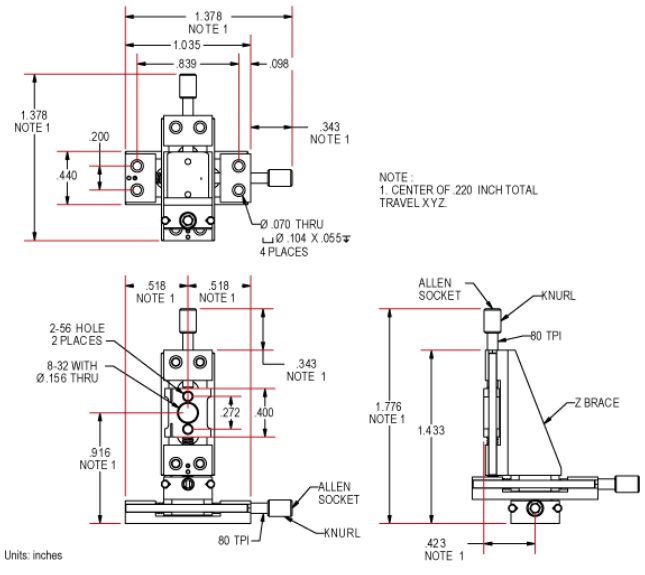

Units: inches

Manual Micro Positioning Stage #56-422

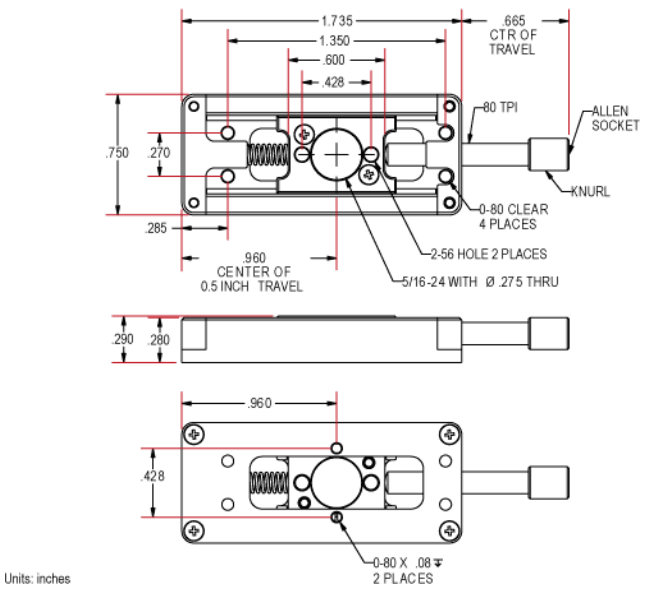

Units: inches

Manual Micro Positioning Stage #56-423

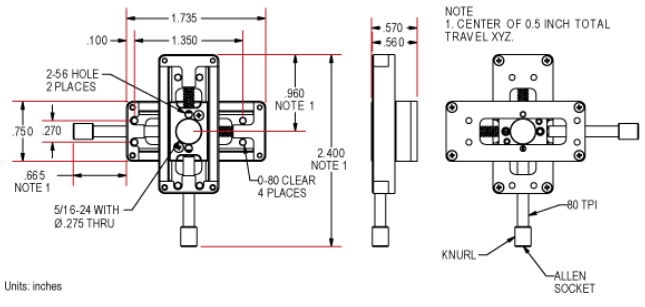

Units: inches

Manual Micro Positioning Stage #56-424

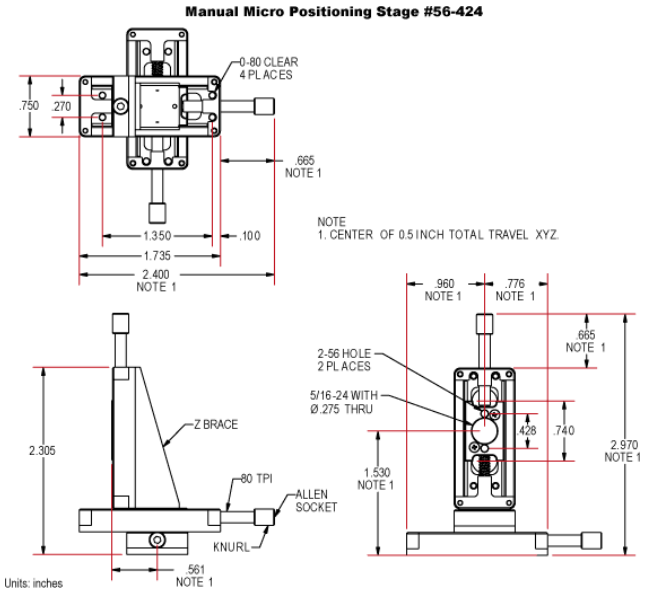

Units: inches

#38-530

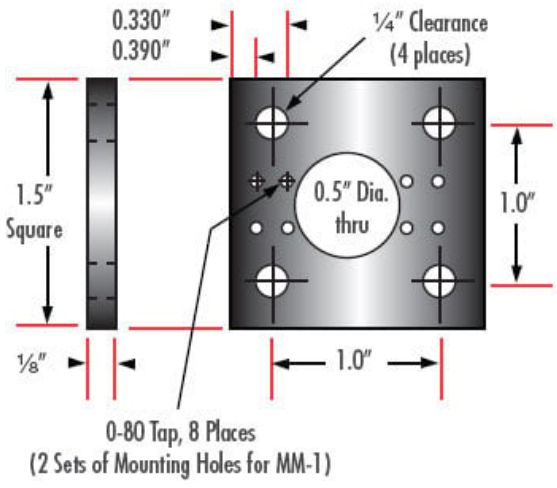

Pinhole Adapter for Stage Type B, #38-534

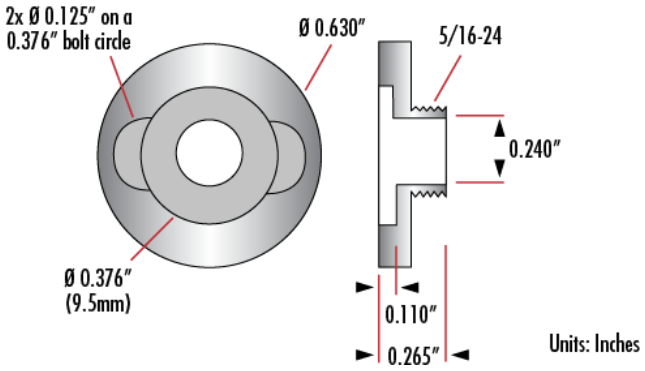

#38-534

Pinhole Adapter for Stage Type A, #38-529

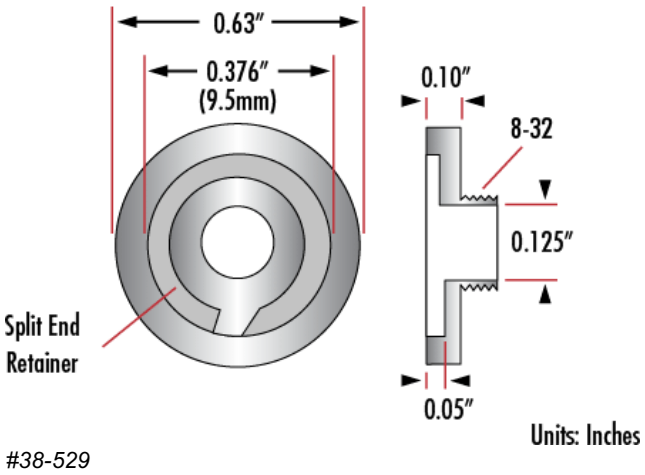

#38-529

;